Mission Critical

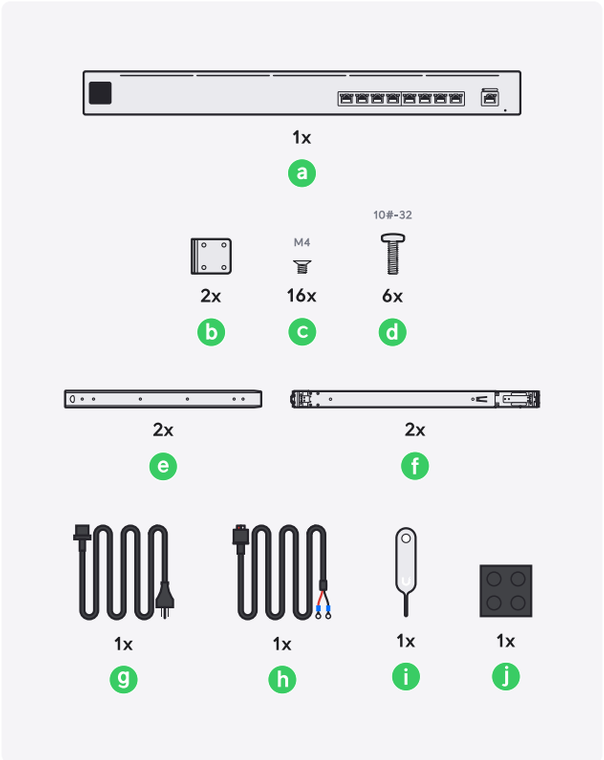

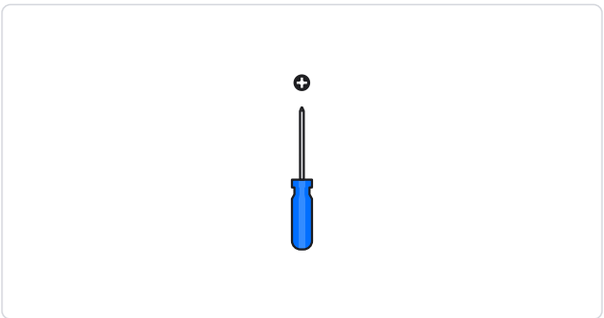

1

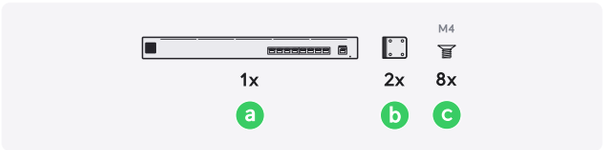

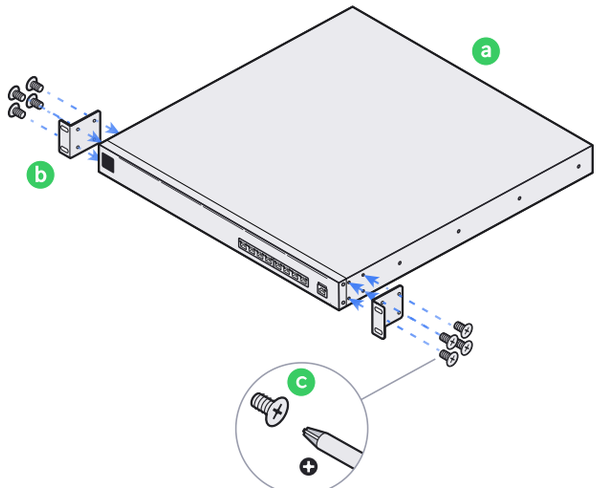

2

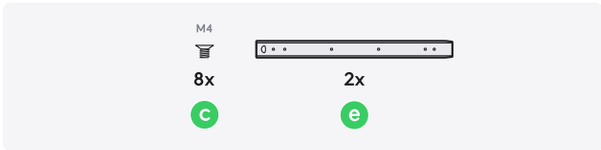

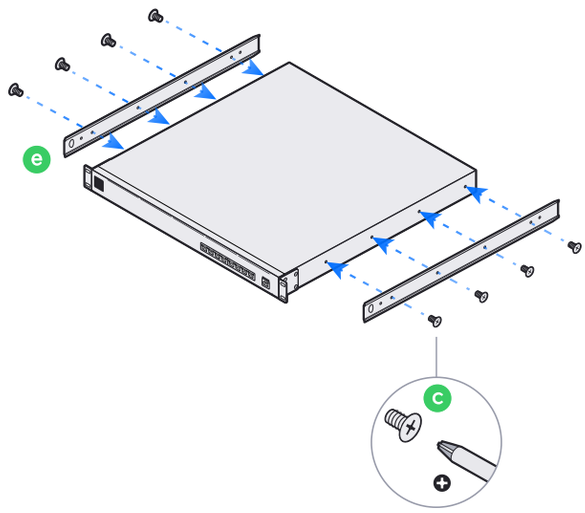

3

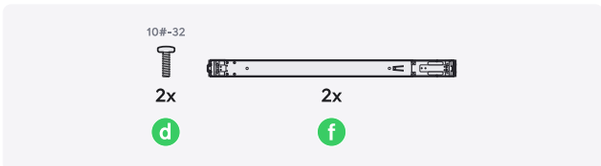

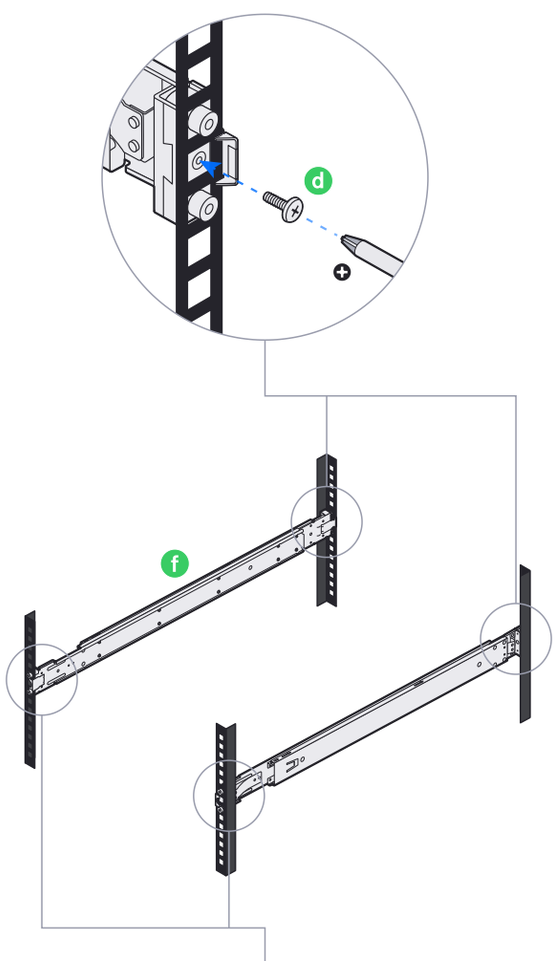

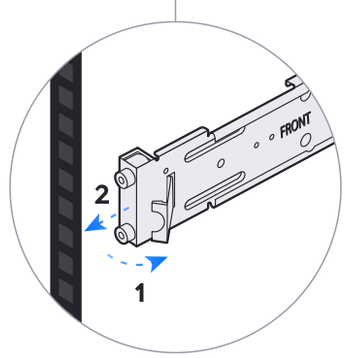

4

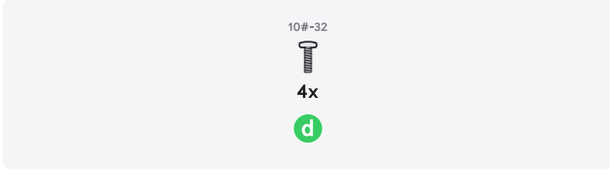

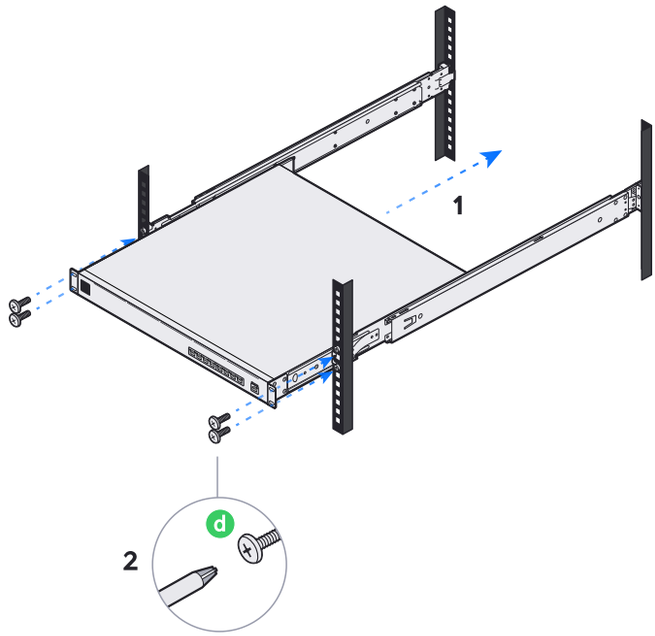

5

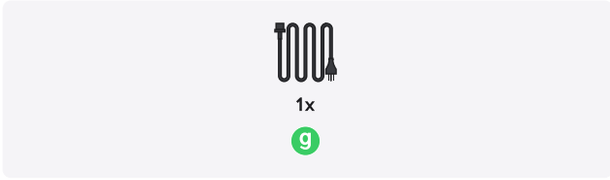

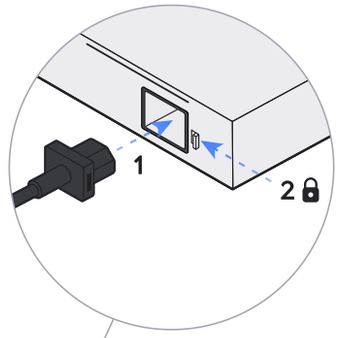

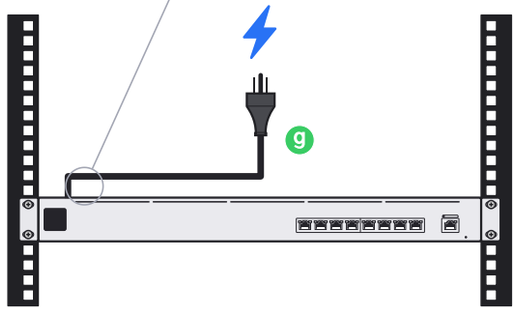

6

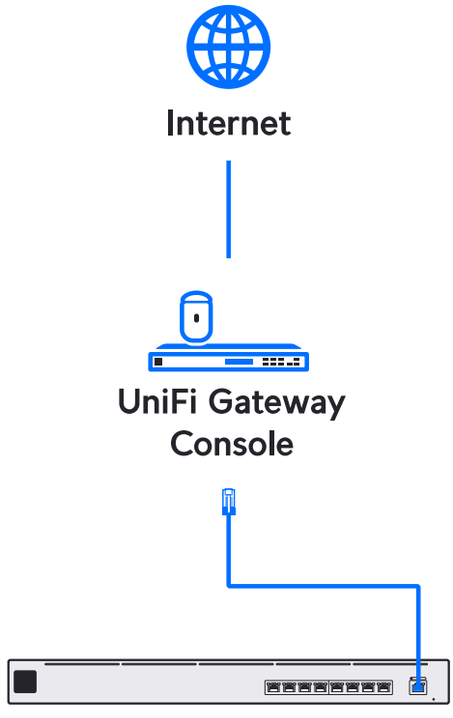
Internet
UniFi Gateway
Console

7

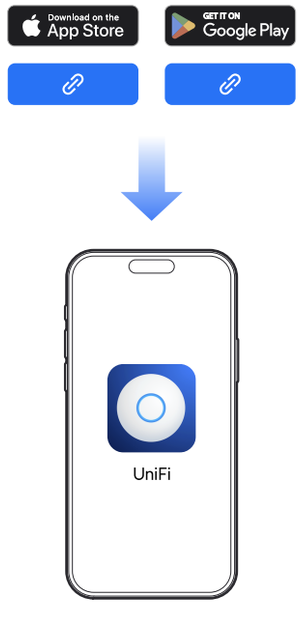
Download on the
App Store
GET IT ON
Google Play
UniFi

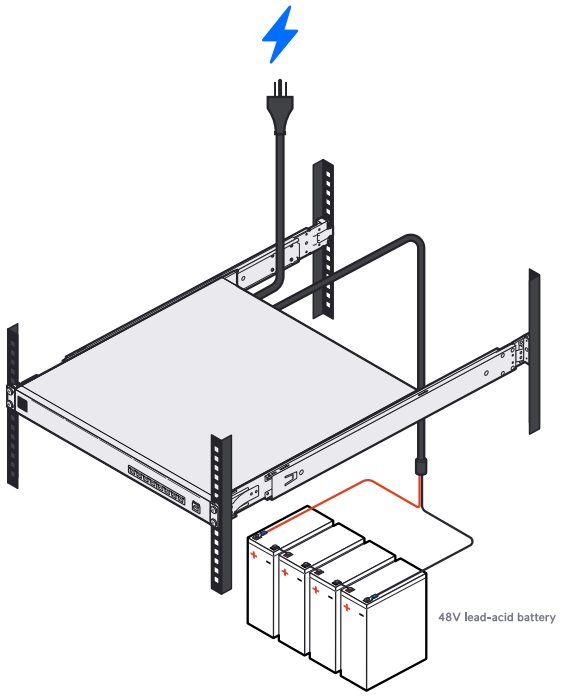
48V lead-acid battery

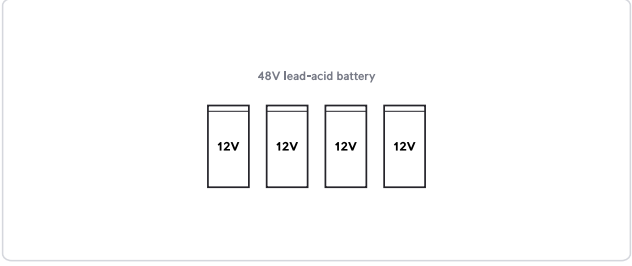
48V lead-acid battery
12V
12V
12V
12V

1

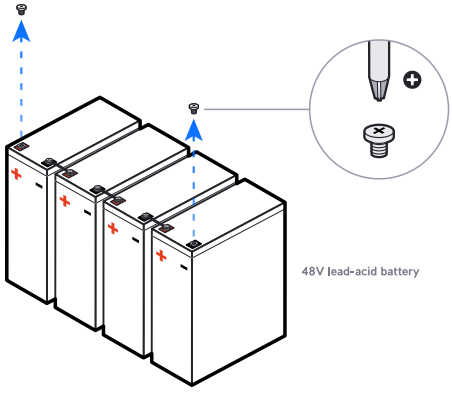
48V lead-acid battery

2

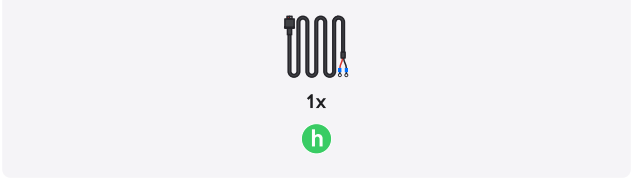
1x

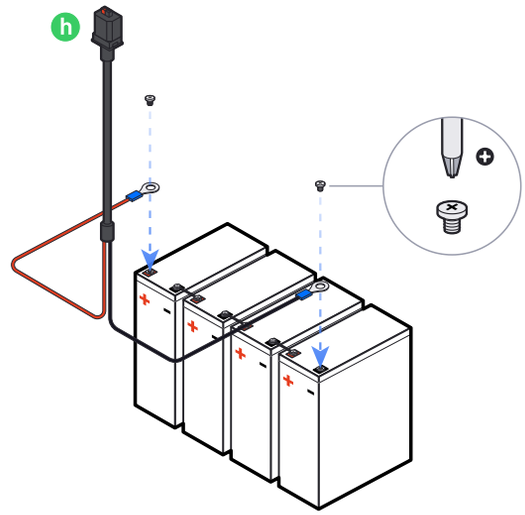

3

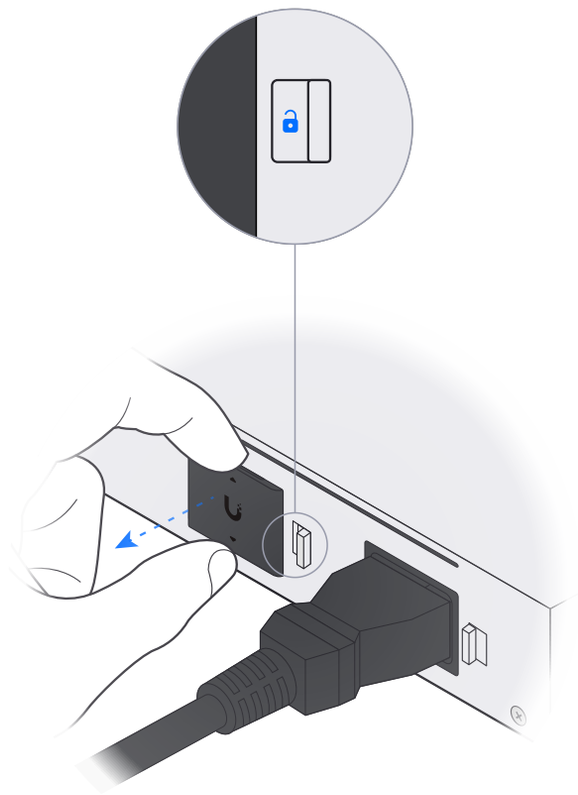

4

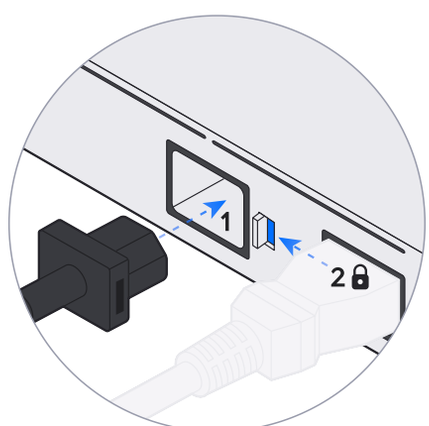

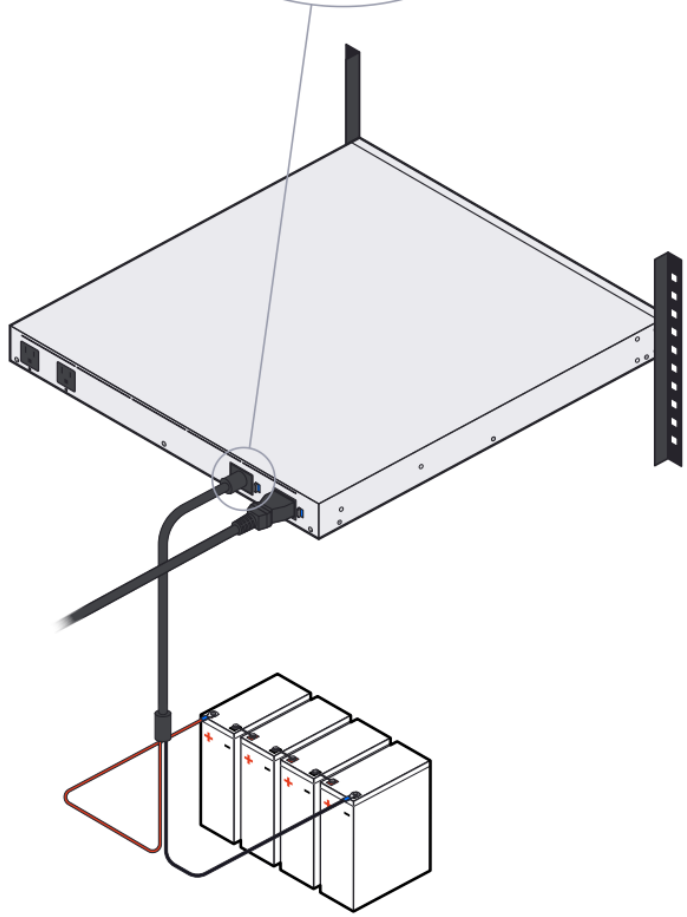

If you need further assistance, visit our Help Center or contact Ubiquiti Support.

©2020-2021 Ubiquiti Inc. All rights reserved. Ubiquiti, Ubiquiti Networks, the Ubiquiti U logo, UniFi, and UniFi Network are trademarks or registered trademarks of Ubiquiti Inc. in the United States and in other countries. App Store and the Apple logo are trademarks of Apple Inc., registered in the U.S. and other countries. Google Play and the Google Play logo are trademarks of Google LLC. All other trademarks are the property of their respective owners.